PEMC
EAST WEST
TECHNOLOGY BRIDGE
EPE
Košice
Slovak Republic
2000

# BUCK - BOOST AC-AC VOLTAGE CONTROLLERS

Obuhov Aleksey, Otchenash Vladimir, Zinoviev Gennady
Novosibirsk state technical university, Faculty of an industrial electronics engineering, Av. K. Marx, 20, Novosibirsk, 630092, Russia
tel.: 383-2-460866; fax 383-2-460209; e-mail: indelect@ref.nstu.ru

Abstract. Offered new class of buck-boost AC voltage controllers (VC) are investigated. Buck-boost controllers has become possible at introduction in the AC-AC converters with the switches in addition to the energy storage inductors and capacitors, and also due to pulse-width control by energy interchanging between them, similary to appropriate DC-DC converters. The unified direct methods of calculation of such VC is developed. The mathematical models of the VC are constructed, the main characteristics are obtained which are checked by simulation. New controllers especially suit for AC power conditioners and as the soft starters for induction motors too.

Keywords: AC/AC converters, Converter control, Direct method, Power conditioners.

## 1. INTRODUCTION

The classical voltage controllers on the basis of bidirectional thyristors with phase regulation are characterized by low quality of input current and output voltage and also they have a voltage conversion factor less than one. The offered new class VC on transistors is free from these defects. The principle of operation of new voltage controller is similar to the operation of a buck-boost DC-DC converter [1]. The circuits have received development with the account AC of source voltage and the properties of a three-phase system [2, 3].

## 2. THREE-PHASE VOLTAGE CONTROLLERS

Three-phase voltage controllers. The simple base circuit of three-phase buck-boost voltage controller is shown in the Fig. 1. In each phase the circuit contains input LC-filters, input keys $K_1$ on transistors with inverse-parallel diodes controlled by impulses, described by switching function $F_1$, accumulative inductors L, output keys $K_2$ on transistors with inverse-parallel diodes controlled by impulses, described by switching function $F_2$, and also accumulative capacitors C and loads Z.
From the given circuit by exchanging places of inclusion accumulative inductors and input keys we can obtain the boost VC. By virtue of a continuity of an input current of the controller, the input LC-filters can be taken away.

The second variant of the buck-boost voltage controller is shown in the Fig. 2. The given circuit is obtained from the known DC-DC Cuk's-converter [1]. It contains accumulative inductors $L_1$ and capacitors $C_1$, joint with an input keys $K_1$, both filter inductors $L_2$ and capacitors $C_2$, joint with a loads Z. By virtue of a continuity of an input current the circuit in the Fig. 2. does not contain an input LC-filter.

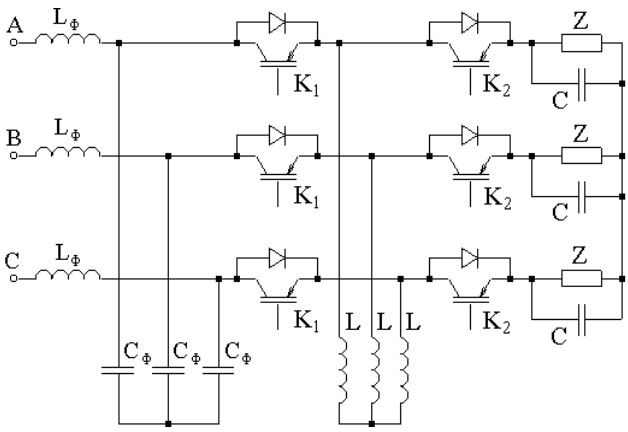


Fig. 1.

By the further development the multi-cell circuits of voltage controllers were created, when each phase is formed by parallel connection with an input and output of several similar accumulative cells, with the appropriate shift of the control. The double-cell VC on the basis of the circuit in the Fig. 1. is shown in the Fig. 3. The properties of the multi-cell voltage controller are deduced from the properties of one-cell, the analysis approach of that is given below. The multi-cell voltage controller is characterized by the smaller installed power of elements, by the better quality of input and output energy and has more rigid external characteristics, than one-cell is in the Fig. 1.

Mathematical model of the voltage controllers and its analysis
The analysis of the voltage controllers is made by direct methods [4, 5], developed with reference to a mathematical model of the system in the form of the differential equations for the variables of state [5].
The equivalent circuit of one phase of the VC in the Fig. 1. is represented in the Fig. 4., where the load is represented by parallel connection of an active resistance $R_H$ and inductance $L_H$. The input LC-filter is not taken into account.

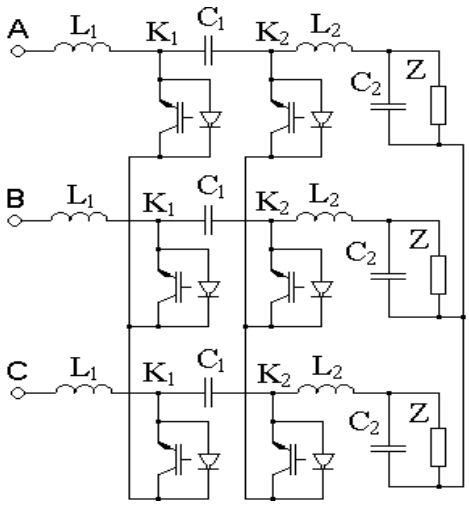


Fig. 2.

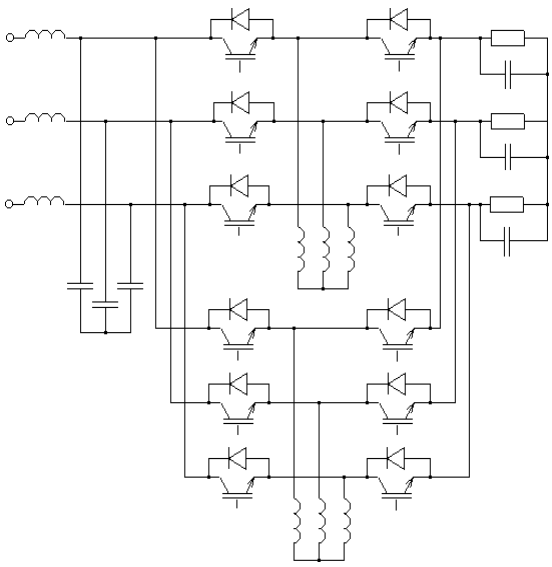

Fig. 3.

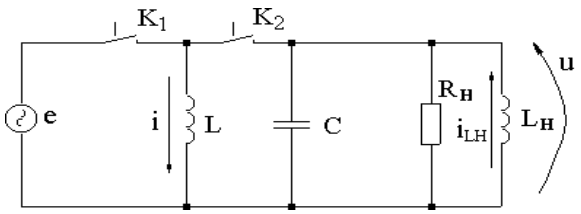


Fig. 4.

The equivalent circuit of one phase of the controller in the Fig. 2. is indicated in the Fig. 5.

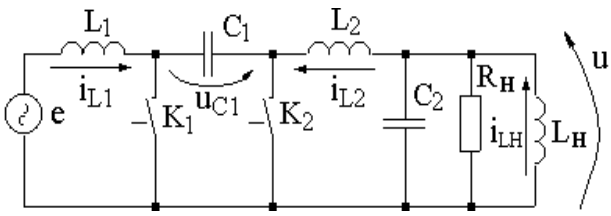


Fig. 5.

The system of differential equations of the first order for the variables of state of the circuit in the Fig. 4. or 5 looks like

$$\frac{d\mathbf{x}}{dt} = \mathbf{A}\mathbf{x} + \mathbf{B}\mathbf{e} \tag{1}$$

where: $\mathbf{x}_1 = (i, u, i_{LH})$ - vector of the variables of state for the circuit in the Fig. 3.;
$\mathbf{x}_2 = (i_{L1}, u_{C1}, i_{L2}, u, i_{LH})$ - vector of the variables of state for the circuit in the Fig. 4.;

$$\mathbf{A_1} = \begin{vmatrix} 0 & -\frac{F_2}{L} & 0 \\ \frac{F_2}{C} & -\frac{1}{R_H C} & -\frac{1}{C} \\ 0 & \frac{1}{L_H} & 0 \end{vmatrix}, \quad \mathbf{B_1}^T = \begin{vmatrix} \frac{F_1}{L} \\ 0 \\ 0 \end{vmatrix}, \quad \mathbf{e_1} = \begin{vmatrix} e \\ 0 \\ 0 \end{vmatrix}, \tag{2}$$

$$\mathbf{A}_2 = \begin{vmatrix} 0 & -\frac{F_2}{L_1} & 0 & 0 & 0 \\ \frac{F_2}{C_1} & 0 & -\frac{F_1}{C_1} & 0 & 0 \\ 0 & \frac{F_1}{L_2} & 0 & -\frac{1}{L_2} & 0 \\ 0 & 0 & \frac{1}{C_2} & -\frac{1}{R_H C_2} & -\frac{1}{C_2} \\ 0 & 0 & 0 & \frac{1}{L_H} & 0 \end{vmatrix}, \tag{3}$$

$$\mathbf{B_2}^T = \begin{vmatrix} \frac{F_1}{L_1} \\ 0 \\ 0 \\ 0 \\ 0 \end{vmatrix}, \qquad \mathbf{e_2} = \begin{vmatrix} e \\ 0 \\ 0 \\ 0 \\ 0 \end{vmatrix}.$$

From the system (1) we receive the differential equation for a variable of state, interesting for us, in this case for the voltage u. The further transformations of the differential equation are formal procedures of a method of algebraisation of the differential equations (ADE) [4, 5]:

1. The differential equation is integrated, squared and averaged for period of the first harmonics (with frequency ω) input voltage.
2. The obtained algebraic equation is extended.
3. The solution of the algebraic equation for the effective value of an unsinusoidal variable is determined.

In result of these procedures we receive the expression for relative effective value of the first harmonics of output voltage of the VC-circuit in the Fig. 4:

$$\frac{U_{(1)}}{E_{(1)}} = U^* = \frac{F_1 F_2}{\sqrt{\left(\omega^2 LC\right)^2 + 2\omega^2 LC\left(F_2^2 + \frac{L}{L_H}\right) + \left(\frac{\omega L}{R_H}\right)^2 + \left(F_2^2 + \frac{L}{L_H}\right)^2}} \tag{4}$$

The expression for relative effective value of the output voltage for the circuit in the Fig. 5. can be obtained similarly. The same way rms values of all the rest variables are obtained.

$$U^* = \frac{F_1 F_2 L_H}{\sqrt{\omega^8 a^2 + 2\omega^6 ca + 2\omega^4 fa + \omega^6 b^2 + 2\omega^4 db + \omega^4 c^2 + 2\omega^2 fc + \omega^2 d^2 + f^2}}, \tag{5}$$

where: $a = L_1 C_1 L_2 C_2 L_H$, $b = \frac{L_1 C_1 L_2 L_H}{R_H}$,

$c = \left(L_1 C_1 L_H + L_1 C_1 L_2 + L_1 C_2 L_H F_1^2 + L_2 C_2 L_H F_2^2\right)$,

$d = \left(\frac{L_1 L_H F_1^2}{R_H} + \frac{L_2 L_H F_2^2}{R_H}\right)$, $f = \left(L_1 F_1^2 + L_H F_2^2 + L_2 F_2^2\right)$.

## 3. CHARACTERISTICS OF THE CIRCUITS

On the base of the obtained ratio (4) and (5) it is possible to construct the control characteristics $U^* = f(F_1^*)$ and the external characteristics of the voltage controller $U^* = f(R^*)$, where $F_1^*$ is average value of switching function $F_1$. The control characteristics of both circuits are shown in the Fig. 6., the external characteristics are indicated in the Fig. 7., the characteristics for the circuit in the Fig. 5.are placed above. The following parameters were used to construct the above characteristics:
The cosine of an RL-load is equal 0,9;
R* is relative active resistance of an RL-loads referred to a wave resistance of an accumulative LC-network of the appropriate circuit.

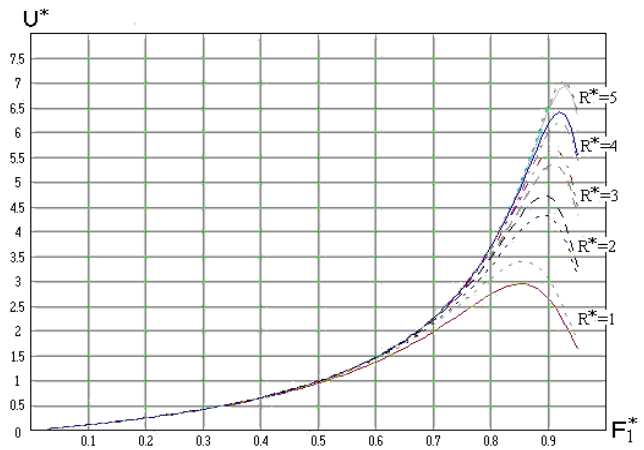


Fig. 6.

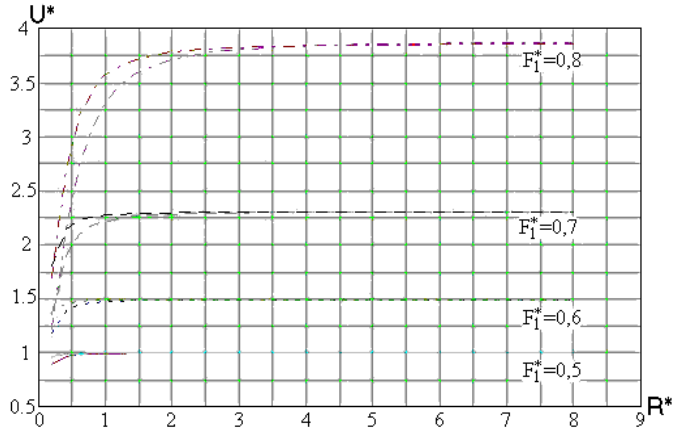


Fig. 7.

The comparison of the calculated and obtained in the simulation on the computer relative output voltage of the circuits in the Fig. 4. ($U_1^*$) and 5 ($U_2^*$) is made in the Tab. 1. In this case the following parameters of elements were used:
$L=L_1=L_2=50$ μHn;
$C=C_1=C_2=126{,}7$ μF;
wave resistance of an accumulative network $\rho=\sqrt{L/C}=\sqrt{L_1/C_1}$ =0,628 ohm;
cosine of an RL-load is 0,9;
effective value of input voltage E=220 V.

| $L_H$, Hn | $R_H$, ohm | $R^*$, r. u. | $F_1^*$, r. u. | Account $U_1^*$, r. u. | Account $U_2^*$, r. u. | Simulation $U_1^*$, r. u. | Simulation $U_2^*$, r. u. |
|---|---|---|---|---|---|---|---|
| | | | | | | | |
| 0,004 | 0,63 | 1 | 0,4 | 0,64 | 0,65 | 0,62 | 0,65 |
| | | | 0,5 | 0,95 | 0,97 | 0,91 | 0,98 |
| | | | 0,6 | 1,38 | 1,43 | 1,31 | 1,44 |
| | | | 0,7 | 1,99 | 2,12 | 1,88 | 2,15 |
| | | | 0,8 | 2,74 | 3,07 | 2,62 | 3,12 |
| | | | 0,9 | 2,66 | 3,06 | 2,64 | 3,12 |
| | | | | | | | |
| 0,008 | 1,26 | 2 | 0,4 | 0,65 | 0,66 | 0,64 | 0,66 |
| | | | 0,5 | 0,97 | 0,98 | 0,96 | 0,99 |
| | | | 0,6 | 1,44 | 1,46 | 1,41 | 1,49 |
| | | | 0,7 | 2,15 | 2,22 | 2,13 | 2,28 |
| | | | 0,8 | 3,31 | 3,48 | 3,30 | 3,64 |
| | | | 0,9 | 4,32 | 4,71 | 4,40 | 5,09 |

Tab. 1.

From the Tab. 1. it is eviclent, that the results of the calculation coincide with the result of simulation with the precision of (3-8) %.
The example of oscillogramms of input curent and output voltage for circuit in the Fig. 4. is shown in the Fig. 8.

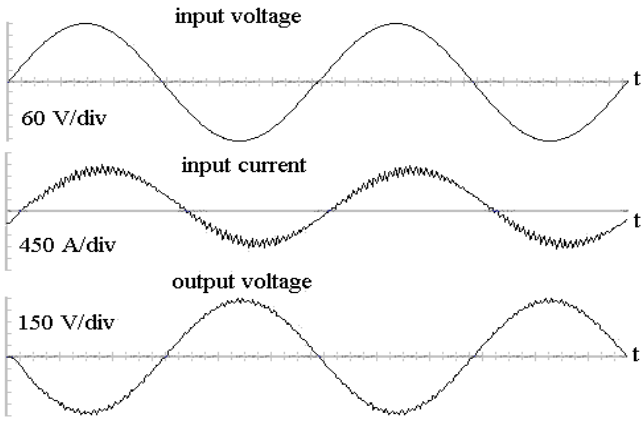


Fig. 8.

## 4. CONCLUSIONS

1. The transformerless AC-voltage controllers are offered, which can have an output voltage more than the input voltage.
2. The direct method of the analysis of the controllers represented by a model in the variables of state is advanced. It permit to receive external, control, power characteristics of the VC without a solution of the differential equations.
3. The circuit in the Fig. 5. has the greater output voltage and more rigid external characteristics with the same values of elements and load. It is also characterized by a continuous input current by the equal quality of output voltage of the VC. However such circuit requires the twice number of the reactive elements.
4. The new cotrollers especially suit for AC power conditioners and as the soft starter for induction motors too.

## 5. REFERENCES

[1] Severns R., Bloom G., Modern DC-to-DC switchmode converter circuits. Van Nostrand Reinhold Co., 1985.

[2] G. Venkataraman, B. K. Johnson, A. Sundaram. An AC-AC power converter for custom power applications. IEEE transactions on power delivery, v.11, № 3, 1996. P.1666-1671.

[3] Zinoviev G. S. The regulator of three-phase voltage controller. The Russian Federation patent № 2122274. Bul. № 37 1998.

[4] Zinoviev G. S. Concept of definition of electromagnetic compatibility factors of power converters with a supply line and load. Proc. PEMC'96, Hungary, Budapest, 1996. P.2.201-2.204.

[5] Zinoviev G. S. Electromagnetic compatibility problems of power converters. Novosibirsk, NSTU, 1998, 90p.

## THE AUTHORS

**Obuhov Aleksey**: aspirant of department of industrial elec tronic, NSTU. One article.

**Otchenash Vladimir:** joint associated professor of department of industrial electronic, NSTU. About 100 articles

**Zinoviev Gennady**: professor of department of industrial electronic, NSTU. More than 100 articles, three monographies, 60 Russian Federation patents, corresponding member of Russian electrotechnical science academy.